HEAT TREATMENT AND FINAL FINISH

PHOSPHATE BLACK STD. PARTS

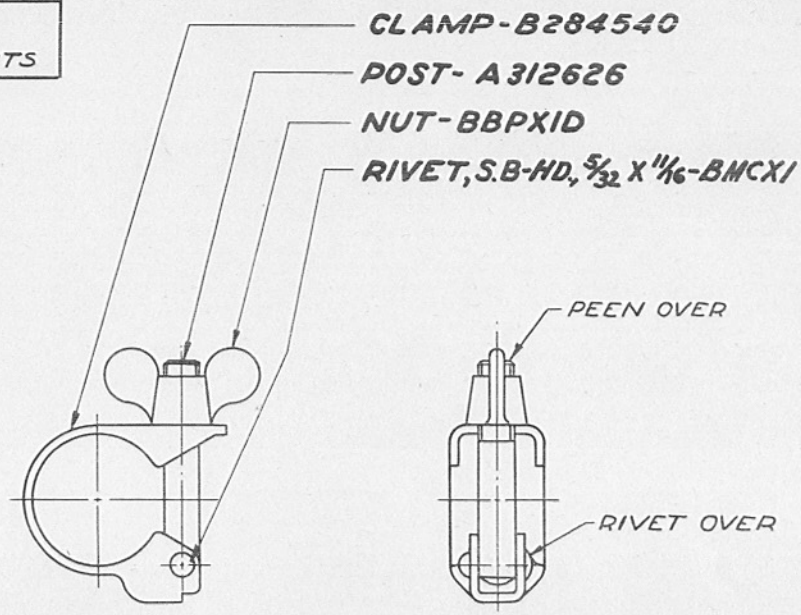

CLAMP, ASSEMBLY (B284541)

SUPERSEDES OLD VELLUM B284541 UNDER REV. DATE OF 7-22-43

0 1 2 3 4 5 INCHES

B284541

PHYSICAL PROPERTIES	
Y. P.	
T. S.	
EL. 2	
RED.	
BR.	
ROCK	
SCL.	

OCTOBER 10, 1942

REVISIONS

1	7-22-43		

DRG. PERTAINS TO

51-125	CAL. 30, B.M.G.,
	M1919A6

TOLERANCE ON DIMENSIONS NOT OTHERWISE SPECIFIED
DECIMAL ±—
FRACTIONAL ±—
ANGULAR ±—

DRAFTSMAN	TRACER	L'D'G DRAFTSMAN
D.O.F.	D.O.F.	A.H.R.
CHECKER		CHIEF DRAFTSMAN

SUBMITTED: A.H. Roe

APPROVED BY ORDER OF THE CHIEF OF ORDNANCE: Geo. L. Kuhn CAPT. ORD. DEPT., U. S. A.

ORDNANCE DEPT., U. S. A.

MADE AT ROCK ISLAND ARSENAL

A 312626

HEAT TREATMENT & FINAL FINISH	PHYSICAL PROPERTIES					
PHOSPHATE BLACK	Y. P.		RED.		SCL.	
	T. S.		BR.			
	E. L. 2		ROCK			

OCTOBER 10, 1942

REVISIONS			
1	7-22-43		

DRG. PERTAINS TO	
B284541	CLAMP, ASS'Y.
51-125	GUN, MACH.,
	CAL. .30, BROWNG,
	M1919A6

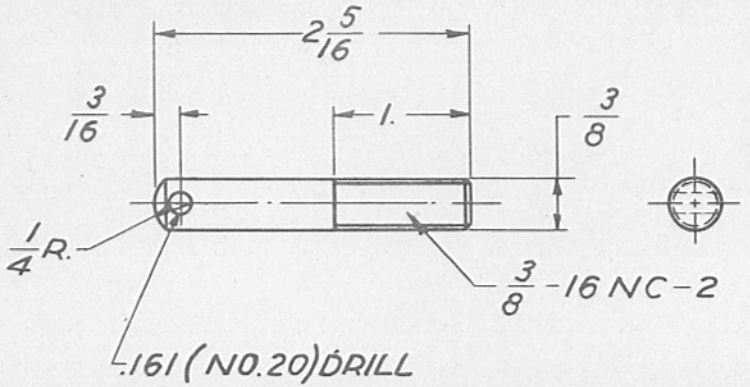

POST, CLAMP
STEEL WD1112
FINISH X
MANUFACTURING COMPONENT

TOLERANCE ON DIMENSIONS
NOT OTHERWISE SPECIFIED
DECIMAL ± —
FRACTIONAL ± 1/64
ANGULAR ± —

DRAFTSMAN	TRACER	L'D'G DRAFTSMAN
D.O.F.	D.O.F.	A.M.R.
CHECKER	O.O.	CHIEF DRAFTSMAN

SUBMITTED:
A.M. Roe

APPROVED BY ORDER OF THE CHIEF OF ORDNANCE
Chas. D. Hudson
CAPT. ORD. DEPT., U. S. A.

ORDNANCE DEPT., U. S. A.

SUPERSEDES OLD VELLUM
A312626 UNDER REV. DATE OF 7-22-43

SCALE 1/1

A 312626

SF AD 23

MADE AT ROCK ISLAND ARSENAL

HEAT TREATMENT AND FINAL FINISH
PHOSPHATE BLACK

PHYSICAL PROPERTIES	
Y. P.	
T. S.	
EL. 2	
RED.	
BR.	
ROCK	
SCL.	

OCTOBER 10, 1942

REVISIONS

1	7-22-43			

NOTE:
ALL RADII TO BE $\frac{1}{16}$
UNLESS OTHERWISE SPECIFIED.

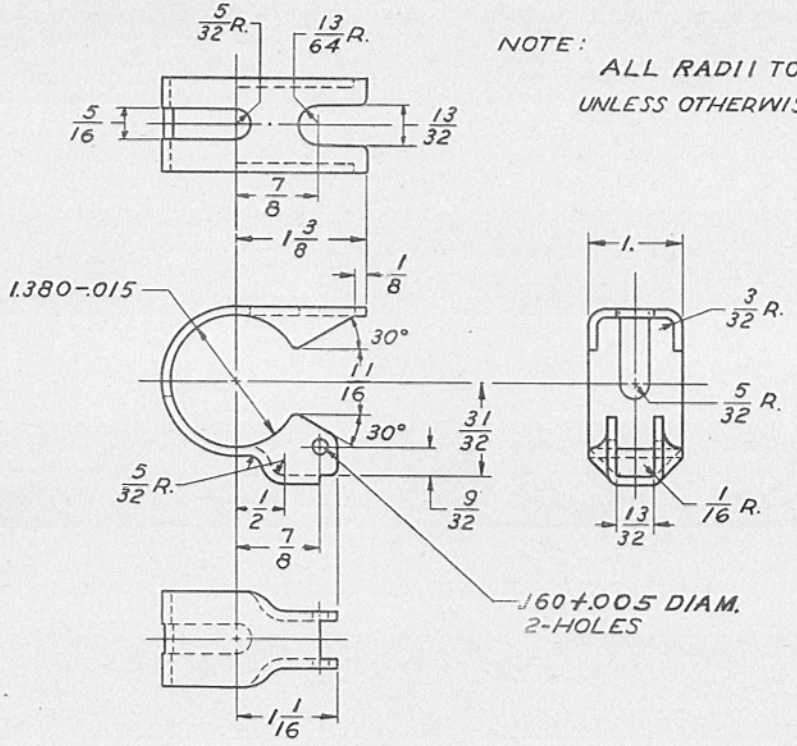

CLAMP
STEEL WD 1010
.0897 (NO. 13 U.S.S. GAGE) THICK
MANUFACTURING COMPONENT

SUPERSEDES OLD VELLUM
B284540 UNDER REV. DATE OF 7-22-43

SCALE 1/1

B284540

DRG. PERTAINS TO

B284541	CLAMP, ASS'Y.
51-125	CAL. 30, B.M.G.
	M1919A6

TOLERANCE ON DIMENSIONS
NOT OTHERWISE SPECIFIED
DECIMAL ± —
FRACTIONAL ± 1/64
ANGULAR ± 2°

DRAFTSMAN	TRACER	L'D'G DRAFTSMAN
D.O.T.	D.O.T.	AHR
CHECKER		CHIEF DRAFTSMAN
AHR		

SUBMITTED:
A.H. Roe

APPROVED BY ORDER OF THE CHIEF OF ORDNANCE
Geo. L. Rueben
CAPT. ORD. DEPT., U. S. A.

ORDNANCE DEPT., U. S. A.

MADE AT ROCK ISLAND ARSENAL

HEAT TREATMENT AND FINAL FINISH

PHOSPHATE BLACK STD. PARTS

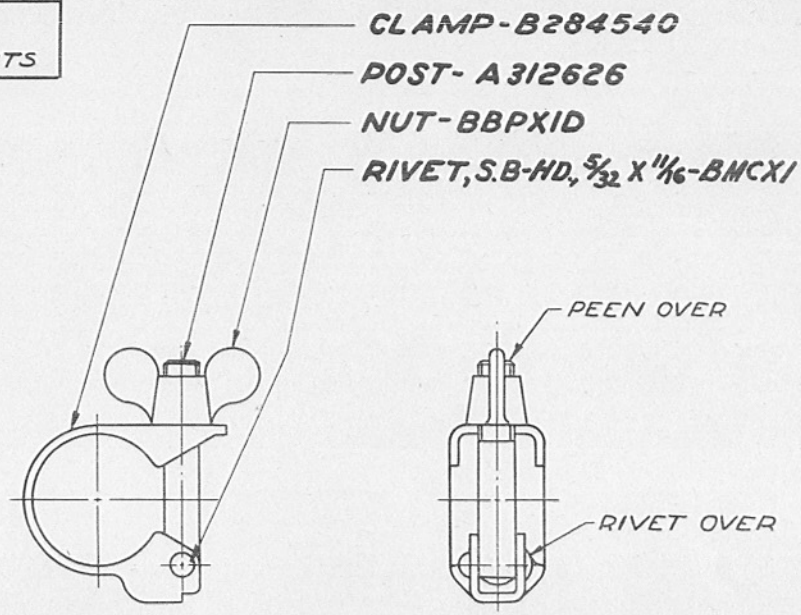

CLAMP, ASSEMBLY (B284541)

SUPERSEDES OLD VELLUM B284541 UNDER REV. DATE OF 7-22-43

0 1 2 3 4 5 INCHES

B284541

PHYSICAL PROPERTIES	
Y. P.	
T. S.	
EL. 2	
RED.	
BR.	
ROCK	
SCL.	

OCTOBER 10, 1942

REVISIONS

1	7-22-43		

DRG. PERTAINS TO

51-125	CAL. 30, B.M.G.,
	M1919A6

TOLERANCE ON DIMENSIONS NOT OTHERWISE SPECIFIED
DECIMAL ±
FRACTIONAL ±
ANGULAR ±

DRAFTSMAN	TRACER	L'D'G DRAFTSMAN
D.O.F.	D.O.F.	A.H.R.
CHECKER		CHIEF DRAFTSMAN

SUBMITTED: A.H. Roe

APPROVED BY ORDER OF THE CHIEF OF ORDNANCE: [signature] CAPT. ORD. DEPT., U. S. A.

ORDNANCE DEPT., U. S. A.

MADE AT ROCK ISLAND ARSENAL

NUT, WING NC-2
(FORGED)

BBPX1

ORDNANCE STANDARD (COMMERCIAL)

HBH APPROVED 7-17-31 DATE

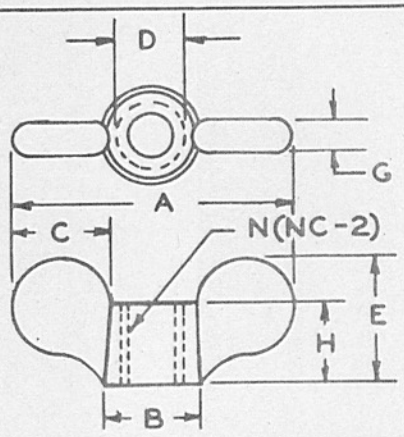

D	NOMINAL DIAMETER MAJOR DIAMETER MIN.	#10 .1900	1/4 .2500	5/16 .3125	3/8 .3750	1/2 .5000	5/8 .6250
N	THREADS PER INCH	24	20	18	16	13	11
A	WIDTH, OVERALL	1-7/32	1-5/16	1-15/32	1-21/32	2-5/16	2-31/32
C	WIDTH, WING	7/16	15/32	1/2	9/16	13/16	1-1/16
E	HEIGHT, OVERALL	5/8	11/16	3/4	13/16	1-1/8	1-7/16
H	HEIGHT, BODY	11/32	3/8	7/16	1/2	5/8	13/16
B	DIAMETER, BODY	7/16	1/2	9/16	5/8	13/16	1
G	THICKNESS	1/8	5/32	5/32	5/32	3/16	1/4
MATERIAL AND FINISH		ORDNANCE PART NUMBER					
STEEL - PLAIN FINISH		503453	503454	503455	503456	503457	503458
		*ORDNANCE LIMITED STANDARD (ORDNANCE DESIGN)					
BRASS - PLAIN FINISH		503459	503460	503461	503462	503463	503464

MATERIAL: COMMERCIAL, AS ORDERED — DIMENSIONS IN INCHES

DIMENSIONS: APPROXIMATE

EXAMPLE FOR ORDERING: NUT, WING, STEEL, 3/8"-16NC-2, DRG. BBPX1, PART NUMBER 503456.

NOTE: BASE TO BE FACED 90 DEGREES WITH AXIS OF THREADED HOLE WITHIN 3 DEGREES.

*NOT TO BE USED IN FUTURE DESIGN

FOR BRASS WING NUT SEE DRG. BBPX2

SUPERSEDES OLD TRACING BBPX1 UNDER REVISION DATE OF 10-21-44

REVISION ③ 10-21-44

RIVETS, STEEL

BMCX1

STANDARD SMALL RIVETS (7/16" DIAMETER AND SMALLER)

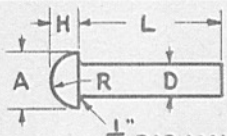

BUTTON HEAD

COUNTERSUNK HEAD

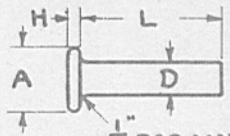

FLAT HEAD

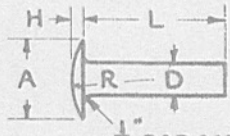

TRUSS HEAD ⊕

D	DIAM. OF BODY	NOM.	3/32	1/8	5/32	3/16	7/32	1/4	9/32	5/16	11/32	3/8	7/16
		MAX.	.096	.127	.158	.191	.222	.253	.285	.317	.348	.380	.443
		MIN.	.090	.121	.152	.182	.213	.244	.273	.305	.336	.365	.428
A	HEAD DIAM.												
	BUTTON HEAD		.166	.219	.273	.327	.385	.438	.492	.546	.600	.656	.765
	CK. HEAD		.176	.231	.289	.346	.407	.463	.520	.577	.635	.694	.808
	FLAT HEAD		.190	.250	.312	.374	.440	.500	.562	.624	.686	.750	.874
	TRUSS HEAD		.238	.313	.390	.468	.550	.625	.703	.780	.858	.938	1.093
H	HEAD HEIGHT												
	BUTTON HEAD		.071	.094	.117	.140	.165	.188	.211	.234	.257	.281	.328
	CK. HEAD		.040	.053	.066	.079	.094	.106	.119	.133	.146	.159	.186
	FLAT HEAD		.032	.042	.052	.062	.073	.083	.094	.104	.114	.125	.146
	TRUSS HEAD		.032	.042	.052	.062	.073	.083	.094	.104	.114	.125	.146
R	HEAD RADIUS												
	BUTTON HEAD		.084	.111	.138	.166	.195	.221	.249	.276	.304	.332	.387
	TRUSS HEAD		.239	.314	.392	.470	.555	.628	.706	.784	.862	.942	1.098
L	LENGTH		X COMMERCIAL LENGTHS										
	1/8		X	X									
	3/16		X	X	X	X							
	1/4		X	X	X	X	X	X					
	5/16		X	X	X	X	X	X	X	X			
	3/8		X	X	X	X	X	X	X	X	X	X	
	7/16		X	X	X	X	X	X	X	X	X	X	X
	1/2		X	X	X	X	X	X	X	X	X	X	X
	9/16		X	X	X	X	X	X	X	X	X	X	X
	5/8		X	X	X	X	X	X	X	X	X	X	X
	11/16		X	X	X	X	X	X	X	X	X	X	X
	3/4		X	X	X	X	X	X	X	X	X	X	X
	13/16		X	X	X	X	X	X	X	X	X	X	X
	7/8		X	X	X	X	X	X	X	X	X	X	X
	15/16		X	X	X	X	X	X	X	X	X	X	X
	1		X	X	X	X	X	X	X	X	X	X	X
	1-1/8		X	X	X	X	X	X	X	X	X	X	X
	1-1/4		X	X	X	X	X	X	X	X	X	X	X
	1-3/8		X	X	X	X	X	X	X	X	X	X	X
	1-1/2		X	X	X	X	X	X	X	X	X	X	X

SPEC.

MATERIAL: STEEL, COM. (ANNEALED) DIMENSIONS IN INCHES

NOTE: RIVETS SHALL BE SPEC. BY TYPE, DIAM. & LGTH.

EXAMPLE: RIVET, S., B-HD., 1/4"x 1" — RIVET, S., CK., 1/4"x 1"
RIVET, S., FL-HD., 1/4"x 1" — RIVET, S., TRUSS HD., 1/4"x 1"

NOTE: 1/32" SIZES NON-PREFERRED.

⊕ ALSO CALLED "WAGON BOX HEAD RIVETS"

REF. B18A-1927

ORDNANCE STANDARD (COMMERCIAL) DATE APPROVED 7/17/34